Mipco™ Connections for Refrigerated Containers

No One Does It Like Mipco™

Mipco™ Interlocked Reefer Power Outlets are used extensively in port terminals and shipboard applications to provide a safe, watertight electrical connection for refrigerated containers. They feature a heavy-duty, interlocked UL/CSA listed and circuit breaker-protected electrical power outlet. This ensures the outlet cannot be switched "live" until a plug is fully engaged and the actuator rod is pushed to the "On" position. Pulling the actuator rod to the "Off" position manually de-energizes the circuit. The circuit de-energizes automatically if the plug is accidentally withdrawn while in the "On" position. Also, the interlock mechanism "breaks" the circuit while the pin and sleeve contacts are still engaged. This provides total operator safety and protection against shock hazard while eliminating arcing damage to the plug and receptacle.

The modular design pioneered by Mipco™ allows for quick, easy installation and maintenance. Mipco™ engineers designed the Interlocked Reefer Power Outlet for the utmost safety, durability and reliability.

M433-30F22

M464-30S22

The Mipco™ Advantage

Safety

- Interlock Mechanism protects against shock hazard and cannot be overridden like other designs
- Plug cannot be inserted or withdrawn under load. Ground pin activates interlock
- Thermoset interiors provide the safest insulation under extreme conditions
- UL 489 listed circuit breaker for optimum operator and circuit protection
- Non-conductive knob is oversize for safe, easy operation

Durability

- Heavy-duty ½" diameter stainless steel actuator rod offers superior resistance to corrosion and abuse
- UL 489 listed circuit breaker is resettable after circuit interruption
- Heavy-gauge stainless steel platform and aluminum receptacle housing resists corrosion and physical damage
- O-ring sealed insulator, contact sleeves, ground pin, interlock actuating pin and actuator rod ensure watertight integrity of wiring compartment when screw cover or plug is removed

Reliability

- Segmented solid brass contact sleeves with beryllium copper compression springs minimize heat rise and corrosion
- UL 489 listed circuit breaker provides branch circuit protection per NEC®

Easy Installation & Service

- Mipco's "modular design" makes installation and maintenance fast and inexpensive with easy accessibility to individual parts
- 4-screw, 3-wire receptacle service
- One-piece interlock mechanism requires no adjustment and simplifies maintenance
- Complete line of service parts readily available:
  - Receptacle assembly
  - Circuit breaker assembly
  - Interior assembly
  - Linkage kits
  - Hardware kits
  - Flap cap/screw cap assemblies

NEC and National Electrical Code are registered trademarks of the National Fire Protection Association, Inc.

Thomas&Betts

United States
Tel: 901.252.8000
800.816.7809
Fax: 901.252.1354

Technical Services
Tel: 888.862.3289

www.tnb.com

Mipco™ Connections for Refrigerated Containers

The compact frame choice with nominal inrush current protection.

22kAIC, 480V Interlocked Reefer Power Outlet

Mechanical Interlock Mechanism

- Protects against shock hazard
- Eliminates arcing damage
- Automatically de-energizes the circuit upon plug withdrawal; even if actuating rod is jammed in the On position

Cat. No. M433-30F22 shown

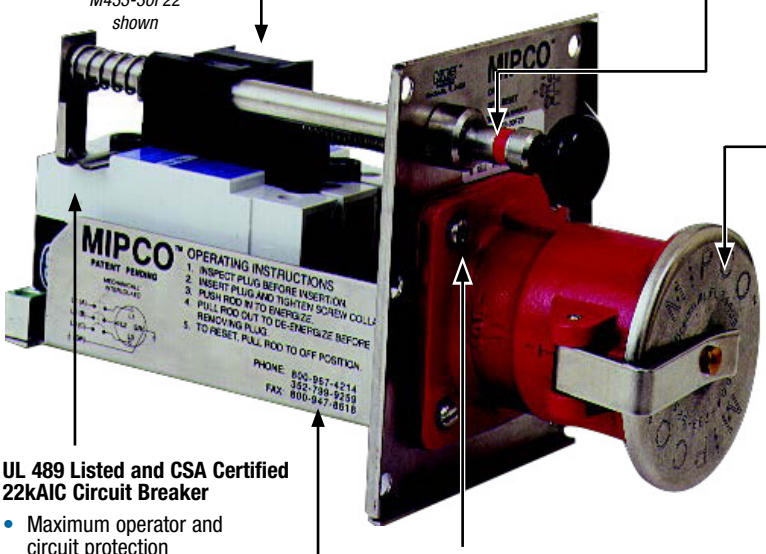

Heavy-Duty Actuating Rod

- Superior durability
- Located away from the receptacle for maximum operator safety
- Withstands user abuse

Stainless Steel Self-Aligning Flap Cap

- Ensures a positive environmental seal
- Maximum corrosion resistance
- Withstands user abuse

UL 489 Listed and CSA Certified 22kAIC Circuit Breaker

- Maximum operator and circuit protection
- Branch circuit protection per NEC®

Receptacle Mounting Design

- Easy installation and service (four stainless steel screws, three wires)

Heavy-Gauge Stainless Steel Platform

- Maximum durability from user abuse
- Corrosion resistant

Ground Pin Actuates Interlocking Mechanism

- Ensures grounding integrity with ground pin
- Receptacle is de-energized upon plug removal. When plug is reinserted, switch can be operated

Metallic Receptacle Housing

- Withstands physical abuse
- Corrosion resistant

O-Ring Sealed Interiors and Sleeves

- Seals wiring compartment from environment
- Eliminates accidents and burnouts

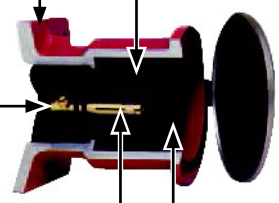

Segmented Contact Sleeves with Compression Springs

- Consistent contact pressure
- Minimizes heat rise and corrosion
- Self-cleaning pins and sleeves for longer life

Thermoset Interiors

- Resist high heat and arcs

Mipco™ Connections for Refrigerated Containers

Interlocks with Metallic Receptacle Housings

M432-30S22

M433-30F22

M452-50S22

M464-30S22

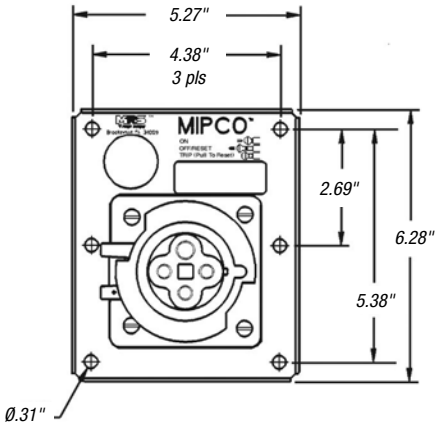

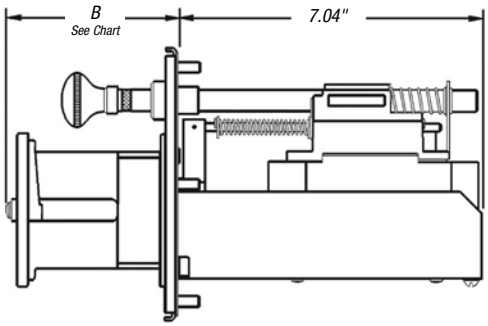

CAT. NO. FLAP CAP	CAT. NO. SCREW CAP	AMPS	VOLTAGE RATINGS	POLES, WIRES	TRIP RATING AMPS†	MATING PLUG CAT. NO.*
M432-30F22	**M432-30S22**	30	250V, 60 Hz	3P4W	30	**334MPXT**
M433-30F22	**M433-30S22**	32	380/440V 50/60 Hz[1]	3P4W	30	**333MPXT**
M452-50F22	**M452-50S22**	50	250V, 60 Hz	3P4W	50	**534MPXT**
M462-50F22	**M462-50S22**	60	250V, 60 Hz	3P4W	50	**634MP2XT**
M464-60F22	**M464-60S22**	60	480V, 60 Hz	3P4W	60	**634MP4XT**

**Mating plugs are sold separately.*

†Other trip ratings available upon request.

[1]480VAC/60 Hz US Common Rating.

AMPERAGE	B
30 & 50A	3.23"
32A	4.00"
60A	5.10"

Thomas&Betts

United States
Tel: 901.252.8000
800.816.7809
Fax: 901.252.1354

Technical Services
Tel: 888.862.3289

www.tnb.com

Mipco™ Connections for Refrigerated Containers

Catalog Number Construction Guide

Mipco™ interlocked reefer power outlet catalog numbers are easily specified using the guide below.

Options include auxiliary switch construction.

Indicates field that must be filled in to complete order.
***Note**: Availability of selected configuration will be verified at quotation time.*

M **4** **33** - **30** **F** **22**

Receptacle Housing Material
M = Metallic: Copper-Free, Cast Aluminum; 32 & 60A modules only Brass; 30 & 50A modules only

Optional Module Style
Omit for standard interlock
T = "T" Style, Center Push-Rod Module, 32A only

Poles/Wires
4 = 3 Pole, 4 Wire

Receptacle Rating/Configuration
32 = 30A, 250VAC, 50/60 Hz
33 = 32A, 380/440V, 50/60 Hz
52 = 50A, 250VAC, 50/60 Hz
62 = 60A, 250VAC, 50/60 Hz
64 = 60A, 440/48 VAC, 50/60 Hz

Circuit Breaker Trip Rating
30 = 30 Amp
50 = 50 Amp
60 = 60 Amp
***Note:** Breaker trip rating will not exceed receptacle rating.*

Receptacle Cover
F = Flap Cap
S = Screw Cap

Circuit Breaker In-Rush Current Rating
18 = 18kAIC @ 480VAC - Shock Resistant, 15g
22 = 22kAIC @ 480VAC (65kAIC @ 250VAC)
65 = 65kAIC @ 480VAC

Options
PA = Auxiliary Switch

Mipco™ Connections for Refrigerated Containers

Interlocks Complete with Single-Gang Cast Aluminum Enclosure

1BM432-30F22

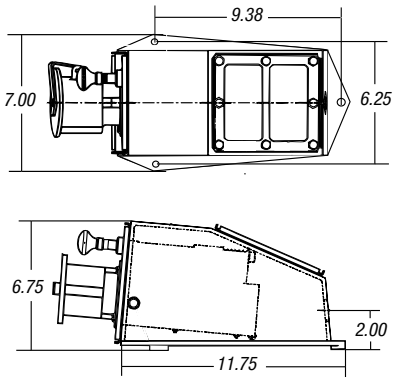

CAT. NO.						
FLAP CAP	SCREW CAP	AMPS	VOLTAGE RATINGS	POLES, WIRES	TRIP RATING AMPS	MATING PLUG CAT. NO.*
1BM432-30F22	**1BM432-30S22**	30	250V, 60 Hz	3P4W	30	**334MPXT**
1BM433-30F22	**1BM433-30S22**	32	380/440V 50/60 Hz[1]	3P4W	30	**333MPXT**
1BM452-30F22	**1BM452-30S22**	50	250V, 60 Hz	3P4W	50	**534MP2XT**
1BM462-30F22	**1BM462-30F22**	60	250V, 60 Hz	3P4W	60	**634MP4XT**
1BM464-30F22	**1BM464-30S22**	60	480V, 60 Hz	3P4W	60	**634MPXT**

** Mating plugs are sold separately.*

[1] 480VAC/60 Hz US Common Rating.

Special Rotary Switch Interlock

Cast aluminum (or brass) switched interlocked used for trailer, rail and common-feed shipboard applications. Circuit protection normally is upstream of load.

SR33341B

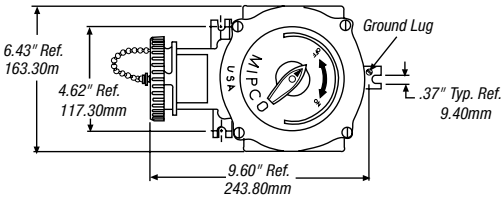

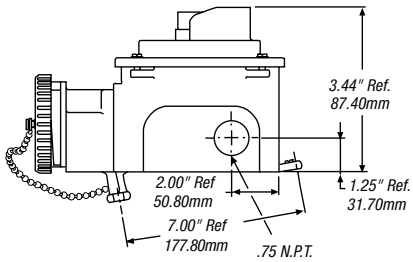

CAT. NO.	RATING
SR33341B	32 Amp, 380–440VAC 50/60 Hz, 3P4W IEC309-2, 3h 480 VAC USA

Accessories

Single-Gang Enclosures – Copper free cast aluminum for maximum corrosion resistance and durability, these can be ordered separately or complete with interlocked outlet by using a "1B" prefix with any interlocked outlet catalog number.

Wedge Gaskets – Molded Neoprene wedge gaskets provide drainage 4° down angle for interlocked outlets; easily installed behind front plate.

Large-Frame Adapter Plate Kit – Stainless steel adapter plate kit allows small-frame 6-bolt interlocked outlets to replace large-frame 8-bolt outlets. Kit bolts to existing 8-bolt enclosure opening.

	CAT. NO.		
OUTLET FRAME SIZE	SINGLE ENCLOSURE	WEDGE GASKET KIT	8-BOLT ADAPTER KIT
Small Frame, 6-Bolt	**1255-01R**	**980-50R**	**523R**

United States
Tel: 901.252.8000
800.816.7809
Fax: 901.252.1354

Technical Services
Tel: 888.862.3289

www.tnb.com